REVISIONS		
ISS	ZONE	DESCRIPTION\PER REQUEST\DATE

注意事項	
1	包裝方式:500/包

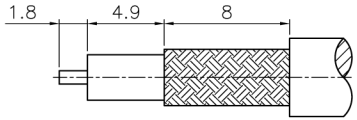

RECOMMENDED
CABLE STRIPPING DIM'S
(建議剝線尺寸)

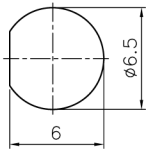

RECOMMENDED
MOUNTING HOLE
(建議架設孔)

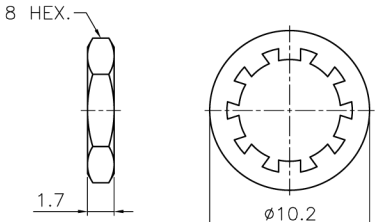

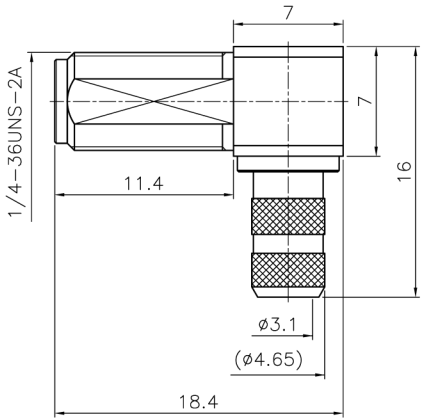

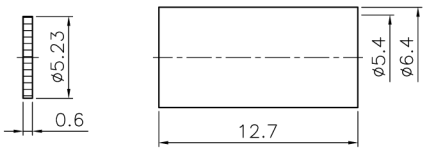

TYPICAL SPECIFICATIONS

1.0. ELECTRICAL
- 1.1. FREQUENCY RANGE: DC-6 GHz
- 1.2. NOMINAL IMPEDANCE: 50 OHM
- 1.3. WORKING VOLTAGE: 335 VOLTS MAX.
- 1.4. PROOF VOLTAGE: 1000 VOLTS
- 1.5. VSWR: 1.3 MAX. @ 3 GHz

2.0. MATERIALS
- 2.1. BODIES: BRASS PER JIS-C3604
- 2.2. CENTER CONTACT: BRASS PER JIS-C3604
- 2.3. INSULATION: PTFE PER ASTM D1457 AND ASTM D1710
- 2.4. FERRULE: BRASS PER JIS-C2700

3.0. ENVIRONMENTAL
- 3.1. OPERATING TEMPERATURE RANGE: -65° C TO +165° C

1. CRIMPED FERRULE
   HEX. CRIMP SIZE .213"
2. CONTACT PIN TO SOLDER
3. MAX. PANEL THICKNESS=3.2mm

NO.	DESCRIPTION	MATERIAL	FINISH	Q'TY	DRAWING NO.
8	HEX NUT	BRASS	GOLD	1	HN8-1/4-36X17G
7	WASHER	S50C	GOLD	1	WS-102/65X05SG
6	FERRULE	BRASS	GOLD	1	FR-64/54X127G
5	CAP	BRASS	GOLD	1	CV-523X06G
4	BARREL	BRASS	GOLD	1	SMA6422B2-4-465/31G
3	CONTACT PIN	BRASS	GOLD	1	SMA6422B2-3-2/12G
2	INSULATOR	PTFE	WHITE	1	SMA1251A1-2T-50
1	BODY	BRASS	GOLD	1	SMA6422B1-1G

DIMENSIONS ARE IN MILLIMETERS
UNLESS OTHERWISE SPECIFIED TOLERANCES
ANGLES = ±3°
UP TO 6 = ±0.1
6-40 = ±0.2
40-120 = ±0.6
120-315 = ±1
ABOVE 315 = ±1.6

SCALE/比例 3/1
DATE/時間 05-20-12'

APPROVED/核准 MARK
CHECKED/檢查 MARK
DRAWN/繪圖 MARK

FILE NO. F:\CAD\SMA\6422B2\50\GTG-L200-A#

JAW Dropper
Innovation Channel Co.,Ltd.

TITLE/品名 SMA R/A BULKHEAD JACK
(RG-58/U,LMR-195,LMR-200)

DRAWING NO./圖號 SMA6422B2-GTG-L200-50 REV A

CUSTOMER NO./客戶編號 REV